Product data sheet

Specifications

discrete output module Modicon Quantum - 12 O - 24..125 V DC

140DDO88500

Main

Range Of Product	Modicon Quantum automation platform
Product Or Component Type	Dc discrete output module
Discrete Output Number	12

Complementary

Group Of Channels	2 groups of 6
Discrete Output Logic	Negative logic (sink)
Addressing Requirement	1 input word 1 output word
Discrete Output Voltage	24...125 V DC
Output Voltage Limits	19.2...156.2 V
Maximum Load Current	<= 3 A 32…140 °F (0…60 °C) each group <= 6 A 32…140 °F (0…60 °C) per module <= 0.75 A 32…104 °F (0…40 °C) each point
Surge Current	4 A 1 ms
Response Time	1 ms at state 0 to state 1 1 ms at state 1 to state 0
Short-Circuit Protection	With
Output Overvoltage Protection	By varistor per group
Load Inductance	No limit (protected by diode)
Maximum Tungsten Load	41 W 115 V 46 W 130 V 8 W 24 V
Switching Frequency	<= 50 Hz
Fault Indication	Overcurrent
Isolation Between Channels And Bus	2500 Vrms DC for 1 minute
Isolation Between Group	1200 Vrms DC for 1 minute
Protection Type	Internal output protection by 4 A fuse
Power Dissipation	1 W + (0.77 x all points on)
Marking	CE
Local Signalling	Bus communication is present (Active) 1 LED green) External fault detected (F) 1 LED red) Input status 16 LEDs green)
Bus Current Requirement	375 mA 6 outputs at state 1 650 mA 12 outputs at state 1

Disclaimer: This documentation is not intended as a substitute for and is not to be used for determining suitability or reliability of these products for specific user applications

Module Format	Standard
Net Weight	0.99 lb(US) (0.45 kg)

Environment

Product Certifications	GOST FM Class 1 Division 2 C-Tick RMRS
Standards	UL 508 CSA C22.2 No 142
Resistance To Electrostatic Discharge	4 kV contact IEC 801-2 8 kV on air IEC 801-2
Resistance To Electromagnetic Fields	9.14 V/yd (10 V/m) 80…2000 MHz IEC 801-3
Ambient Air Temperature For Operation	32…140 °F (0…60 °C)
Ambient Air Temperature For Storage	-40…185 °F (-40…85 °C)
Relative Humidity	95 % without condensation
Operating Altitude	<= 5000 m

Packing Units

Unit Type Of Package 1	PCE
Number Of Units In Package 1	1
Package 1 Height	6.42 in (16.3 cm)
Package 1 Width	1.77 in (4.5 cm)
Package 1 Length	12.28 in (31.2 cm)
Package 1 Weight	18.17 oz (515.0 g)
Unit Type Of Package 2	S03
Number Of Units In Package 2	11
Package 2 Height	11.81 in (30.0 cm)
Package 2 Width	11.81 in (30.0 cm)
Package 2 Length	15.75 in (40.0 cm)
Package 2 Weight	12.97 lb(US) (5.883 kg)

Contractual warranty

Warranty	18 months

Sustainability

Green Premium™ label is Schneider Electric's commitment to delivering products with best-in-class environmental performance. Green Premium promises compliance with the latest regulations, transparency on environmental impacts, as well as circular and low-CO_2 products.

Guide to assessing product sustainability is a white paper that clarifies global eco-label standards and how to interpret environmental declarations.

Learn more about Green Premium >

Guide to assess a product's sustainability >

RoHS/REACh

Well-being performance

Reach Free Of Svhc	
Mercury Free	
Rohs Exemption Information	Yes

Certifications & Standards

Eu Rohs Directive	Pro-active compliance (Product out of EU RoHS legal scope) EU RoHS Declaration
China Rohs Regulation	China RoHS declaration
Weee	The product must be disposed on European Union markets following specific waste collection and never end up in rubbish bins
Circularity Profile	End of Life Information

Dimensions Drawings

Racks for Modules Mounting

Dimensions of Modules and Racks

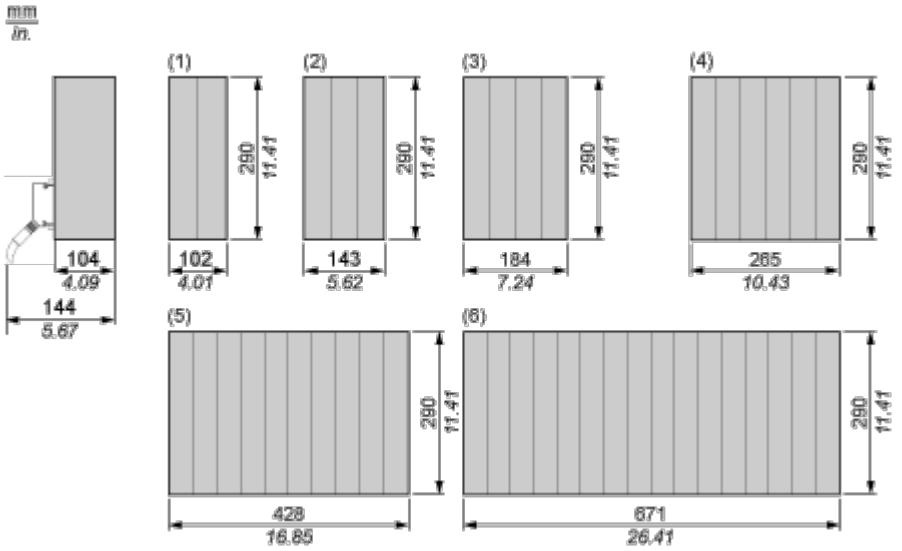

(1) 2 slots

(2) 3 slots

(3) 4 slots

(4) 6 slots

(5) 10 slots

(6) 16 slots

Connections and Schema

24...125 Vdc Discrete Output Source Module

Wiring Diagram

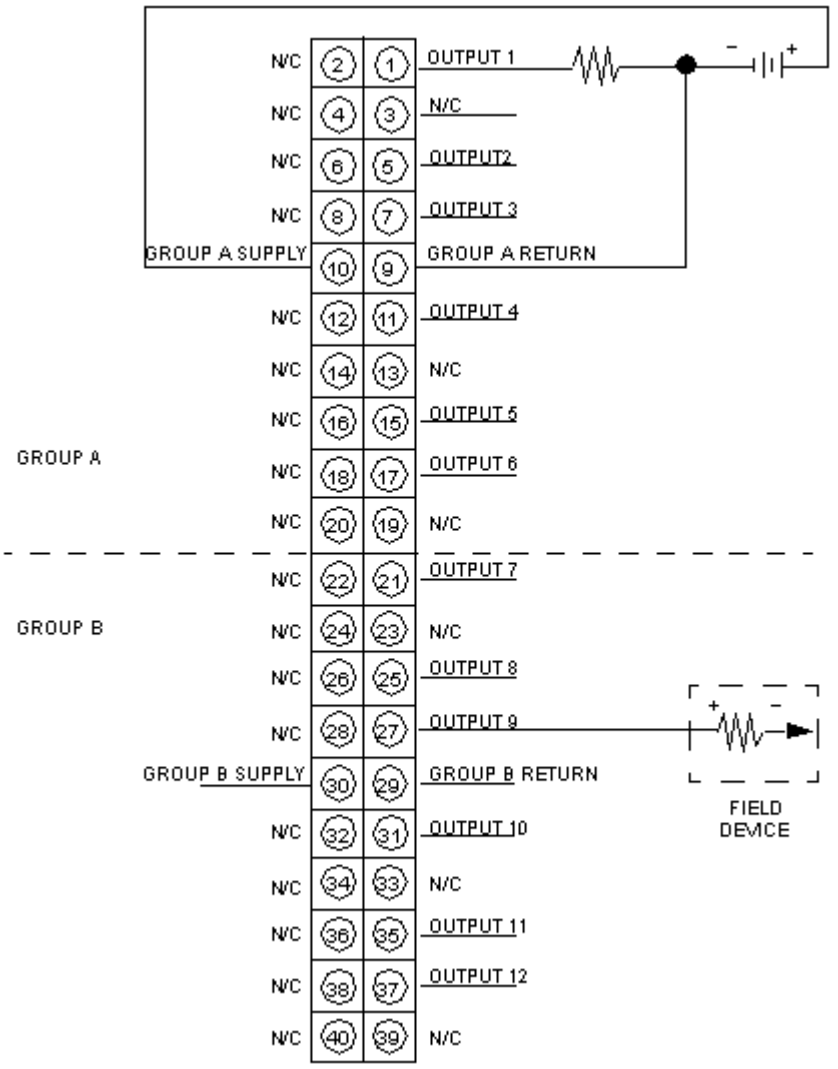

N/C Not Connected