Product data sheet

Specifications

discrete I/O module Modicon Momentum - 10I / 8O relay

170ADM39030

Main

Range Of Product	Modicon Momentum automation platform
Product Or Component Type	Discrete relay I/O base DC
Group Of Channels	1 group of 10 inputs 2 groups of 4 outputs
Discrete Input Number	10 IEC 1131-2 Type 1
Discrete Input Logic	Positive
Discrete Input Voltage	11...30 V DC
Discrete Output Number	8
Discrete Output Type	Relay normally open
Discrete Output Voltage	20...115 V DC 24...230 V AC
Protective Treatment	TC

Complementary

[Us] Rated Supply Voltage	24 V DC
Input Voltage Limits	- 3...30 V
Network Frequency	47...63 Hz
Voltage State 0 Guaranteed	-3...5 V
Voltage State 1 Guaranteed	11...30 V
Current State 0 Guaranteed	<= 1.2 mA
Current State 1 Guaranteed	>= 2.5 mA
Input Resistance	4 kOhm
Discrete Output Current	<= 0.15 mA 115 V inductive <= 0.5 mA 115 V resistive <= 1 mA 24 V inductive <= 2 mA 24 V resistive >= 0.005 A 24 V
Maximum Leakage Current	1 mA 230 V output circuit)
Mechanical Durability	30000000 cycles
Electrical Durability	100000 cycles inductive
Response Time	10 ms 60 Hz from state 0 to state 1 on output 10 ms 60 Hz from state 1 to state 0 on output 2.2 ms from state 0 to state 1 on input 3.3 ms from state 1 to state 0 on input
Isolation Between Channels And Bus	500 V AC

Disclaimer: This documentation is not intended as a substitute for and is not to be used for determining suitability or reliability of these products for specific user applications

Power Dissipation	5.5 W <= 8.5 W
Protection Type	Without protection
Associated Fuse Rating	4 A fast blow input voltage 8 A slow-blow output voltage per group 375 mA fast blow operating voltage
Marking	CE
Terminals Description Plc N°1	(1L+)PW_POS (3)IN_DIS#3 (9)IN_DIS#9 (1)IN_DIS#1 (8)IN_DIS#8 (6)IN_DIS#6 (2)IN_DIS#2 (7)IN_DIS#7 (4)IN_DIS#4 (L+)PW_POS (10)IN_DIS#10 (5)IN_DIS#5 (M-)PW_NEG TB
Terminals Description Plc N°2	(6)OUT_DIS#6 (2L1)PW (2)OUT_DIS#2 TB_1 (8)OUT_DIS#8 (7)OUT_DIS#7 (1L+)PW (4)OUT_DIS#4 (5)OUT_DIS#5 (1)OUT_DIS#1 (3)OUT_DIS#3
Current Consumption	250 mA 24 V DC
Depth	1.87 in (47.5 mm)
Height	5.57 in (141.5 mm)
Width	4.92 in (125 mm)
Net Weight	0.57 lb(US) (0.26 kg)

Environment

Product Certifications	UL CSA
Resistance To Electrostatic Discharge	4 kV contact IEC 801-2 8 kV on air IEC 801-2
Resistance To Electromagnetic Fields	9.14 V/yd (10 V/m) 80...1000 MHz IEC 801-3
Ambient Air Temperature For Operation	32…140 °F (0…60 °C)
Ambient Air Temperature For Storage	-40…185 °F (-40…85 °C)
Relative Humidity	95 % without condensation
Operating Altitude	<= 5000 m

Packing Units

Unit Type Of Package 1	PCE
Number Of Units In Package 1	1
Package 1 Height	3.54 in (9.0 cm)
Package 1 Width	7.09 in (18.0 cm)
Package 1 Length	10.24 in (26.0 cm)

Package 1 Weight	18.13 oz (514.0 g)
Unit Type Of Package 2	S03
Number Of Units In Package 2	6
Package 2 Height	11.81 in (30 cm)
Package 2 Width	11.81 in (30 cm)
Package 2 Length	15.75 in (40 cm)
Package 2 Weight	7.97 lb(US) (3.615 kg)
Unit Type Of Package 3	P06
Number Of Units In Package 3	48
Package 3 Height	29.53 in (75.0 cm)
Package 3 Width	15.75 in (40.0 cm)
Package 3 Length	31.50 in (80.0 cm)
Package 3 Weight	109.51 lb(US) (49.672 kg)

Contractual warranty

Warranty	18 months

Sustainability

Green Premium™ label is Schneider Electric's commitment to delivering products with best-in-class environmental performance. Green Premium promises compliance with the latest regulations, transparency on environmental impacts, as well as circular and low-CO_2 products.

Guide to assessing product sustainability is a white paper that clarifies global eco-label standards and how to interpret environmental declarations.

Learn more about Green Premium >

Guide to assess a product's sustainability >

Transparency RoHS/REACh

Well-being performance

Mercury Free

Rohs Exemption Information	Yes

Certifications & Standards

Reach Regulation	REACh Declaration
Eu Rohs Directive	Pro-active compliance (Product out of EU RoHS legal scope)
China Rohs Regulation	China RoHS declaration
Environmental Disclosure	Product Environmental Profile
Weee	The product must be disposed on European Union markets following specific waste collection and never end up in rubbish bins
Circularity Profile	End of Life Information

Dimensions Drawings

Standard Adapter on a Typical Base

Dimensions

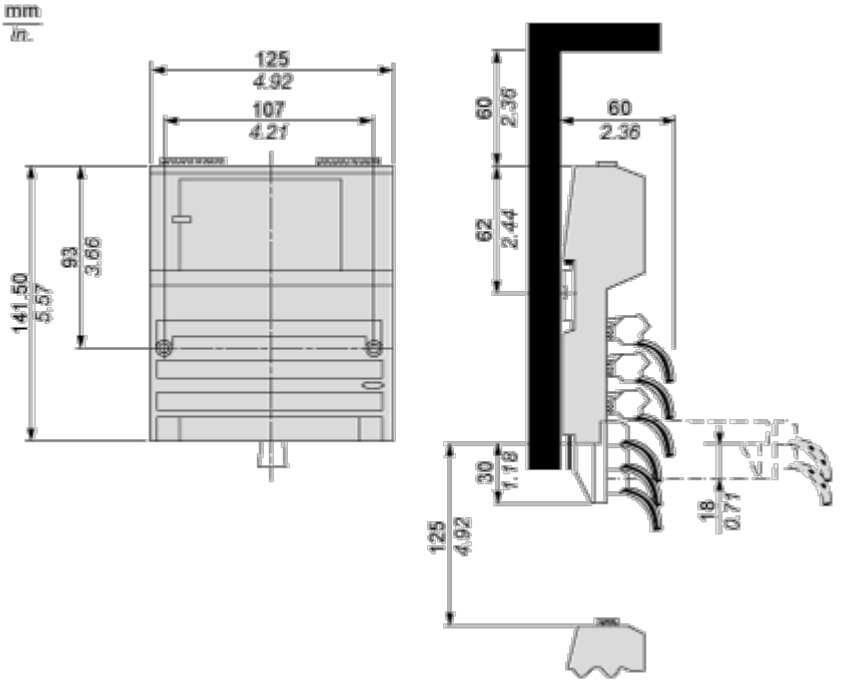

Mounting and Clearance

Mounting on a Wall

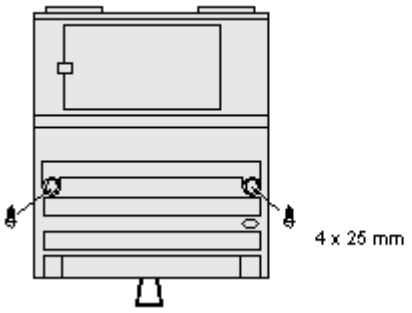

Connections and Schema

External Wiring Diagrams

3-Wire Sensor with a 2-Wire Actuator

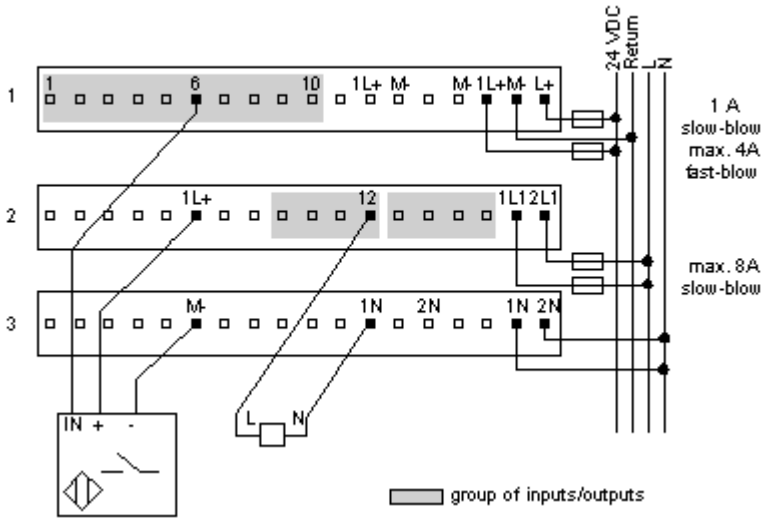

4-Wire Sensor with a 3-Wire Actuator

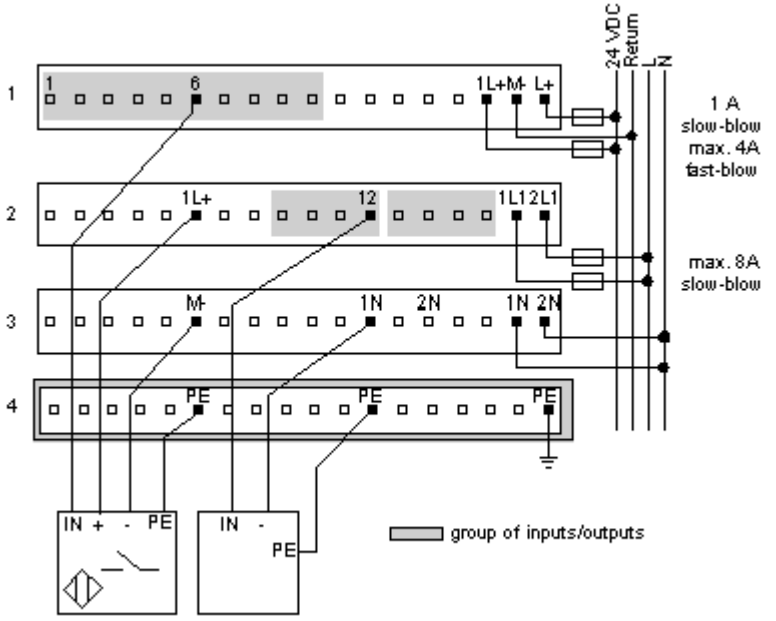

Internal Pin Connections
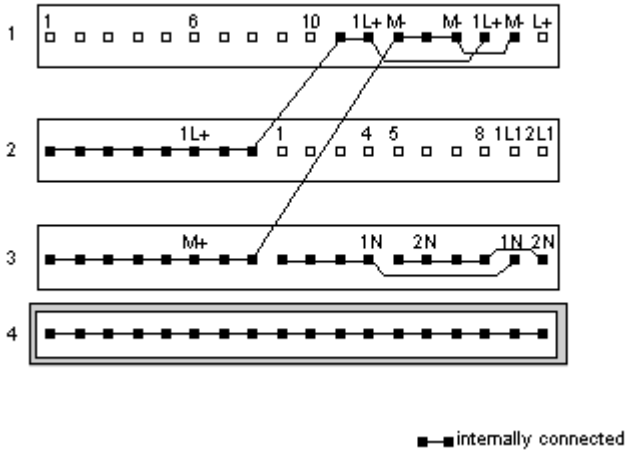
Rows 1 through 3 show the internal connections between terminals on the I/O base. Row 4 shows the internal connections on the optional busbar.