Product data sheet

Specifications

discrete output module Modicon Momentum - 16 O solid state

170ADO74050

Main

Range Of Product	Modicon Momentum automation platform
Product Or Component Type	Discrete output base AC
Group Of Channels	2 groups of 8 outputs
Discrete Output Number	16
Discrete Output Type	Triac
Discrete Output Voltage	230 V AC
Current Per Channel	0.5 A
Short-Circuit Protection	Internal fuse, 5 A slow-blow per group
Protective Treatment	TC

Complementary

[Ue] Rated Operational Voltage	230 V AC
Discrete Output Current	4 A per group 8 A per module
Minimum Output Current	30 mA
Maximum Leakage Current	2.4 mA 230 V AC
Surge Current	10 A for 2 cycles 15 A for 1 cycle 5 A for 3 cycles
Maximum Voltage Drop	<1.5 V 0.5 A at state 1
Output Overload Protection	Internal fuse
Response Time	1/2 x 1/f (= 0.5 of one line cycle) from state 0 to state 1 1/2 x 1/f (= 0.5 of one line cycle) from state 1 to state 0
Isolation Between Channels And Bus	1780 V AC for 1 minute
Power Dissipation	6 W typical 7.5 W maximum
Marking	CE
Local Signalling	Channel status 16 LEDs
Current Consumption	65 mA 230 V AC

Disclaimer: This documentation is not intended as a substitute for and is not to be used for determining suitability or reliability of these products for specific user applications

Terminals Description Plc N°1	(7)OUT_DIS#7 (10)OUT_DIS#10 (6)OUT_DIS#6 (1)OUT_DIS#1 (8)OUT_DIS#8 (2)OUT_DIS#2 (5)OUT_DIS#5 (9)OUT_DIS#9 (1N)PW (1L+)PW (11)OUT_DIS#11 (13)OUT_DIS#13 (4)OUT_DIS#4 TB (12)OUT_DIS#12 (16)OUT_DIS#16 (14)OUT_DIS#14 (15)OUT_DIS#15 (3)OUT_DIS#3
Depth	1.87 in (47.5 mm)
Height	5.57 in (141.5 mm)
Width	4.92 in (125 mm)
Net Weight	0.63 lb(US) (0.284 kg)

Environment

Product Certifications	UL CSA FM Class 1 Division 2
Resistance To Electrostatic Discharge	4 kV contact IEC 801-2 8 kV on air IEC 801-2
Resistance To Electromagnetic Fields	9.14 V/yd (10 V/m) 80...1000 MHz IEC 801-3
Ambient Air Temperature For Operation	32…140 °F (0…60 °C)
Ambient Air Temperature For Storage	-40…185 °F (-40…85 °C)
Relative Humidity	95 % without condensation
Operating Altitude	<= 5000 m

Packing Units

Unit Type Of Package 1	PCE
Number Of Units In Package 1	1
Package 1 Height	3.74 in (9.5 cm)
Package 1 Width	7.09 in (18.0 cm)
Package 1 Length	10.24 in (26.0 cm)
Package 1 Weight	17.00 oz (482.0 g)
Unit Type Of Package 2	S03
Number Of Units In Package 2	6
Package 2 Height	11.81 in (30.0 cm)
Package 2 Width	11.81 in (30.0 cm)
Package 2 Length	15.75 in (40.0 cm)
Package 2 Weight	6.38 lb(US) (2.892 kg)

Contractual warranty

Warranty	18 months

Sustainability

Green Premium™ label is Schneider Electric's commitment to delivering products with best-in-class environmental performance. Green Premium promises compliance with the latest regulations, transparency on environmental impacts, as well as circular and low-CO_2 products.

Guide to assessing product sustainability is a white paper that clarifies global eco-label standards and how to interpret environmental declarations.

Learn more about Green Premium >

Guide to assess a product's sustainability >

Transparency RoHS/REACh

Well-being performance

Mercury Free

Rohs Exemption Information	Yes

Certifications & Standards

Reach Regulation	REACh Declaration
Eu Rohs Directive	Pro-active compliance (Product out of EU RoHS legal scope)
China Rohs Regulation	China RoHS declaration
Environmental Disclosure	Product Environmental Profile
Weee	The product must be disposed on European Union markets following specific waste collection and never end up in rubbish bins
Circularity Profile	End of Life Information

Dimensions Drawings

Standard Adapter on a Discrete VAC Base

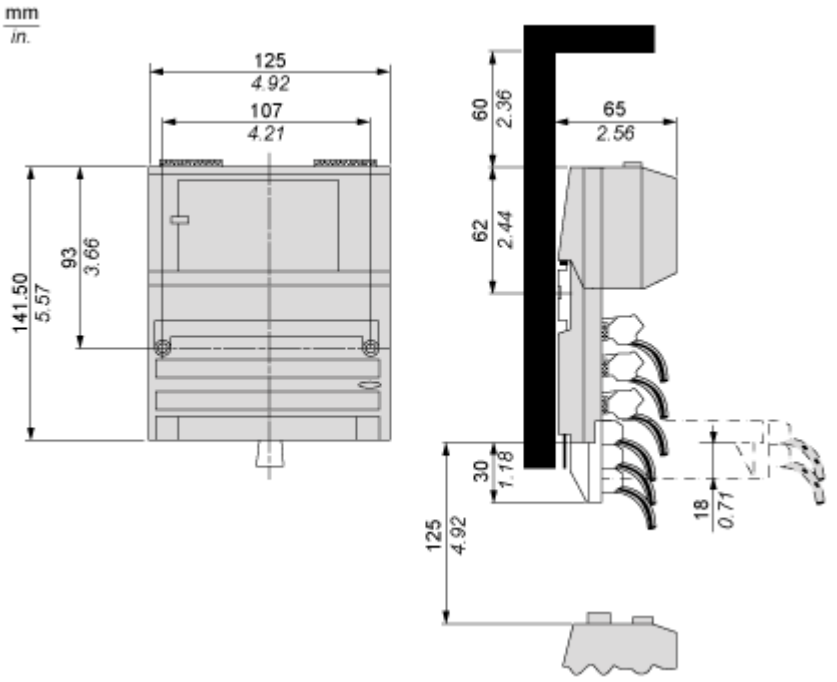

Mounting and Clearance

Mounting on a Wall

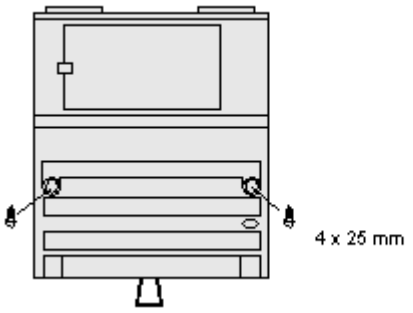

Connections and Schema

External Wiring Diagrams

2-Wire Device

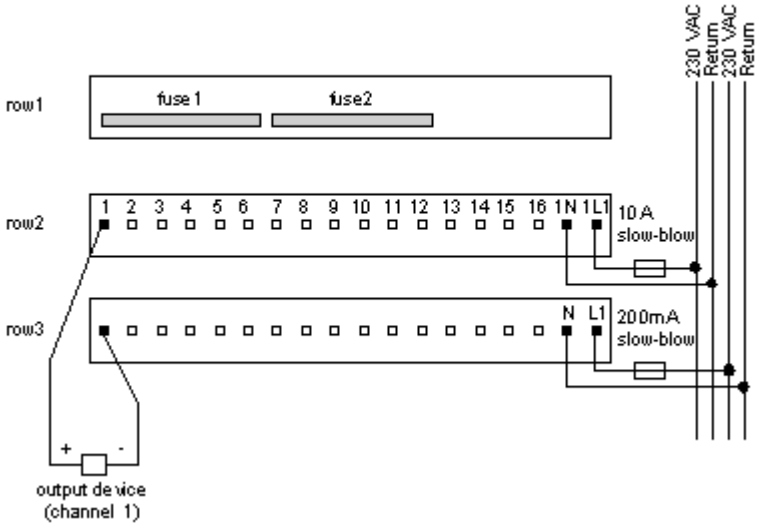

3-Wire Device

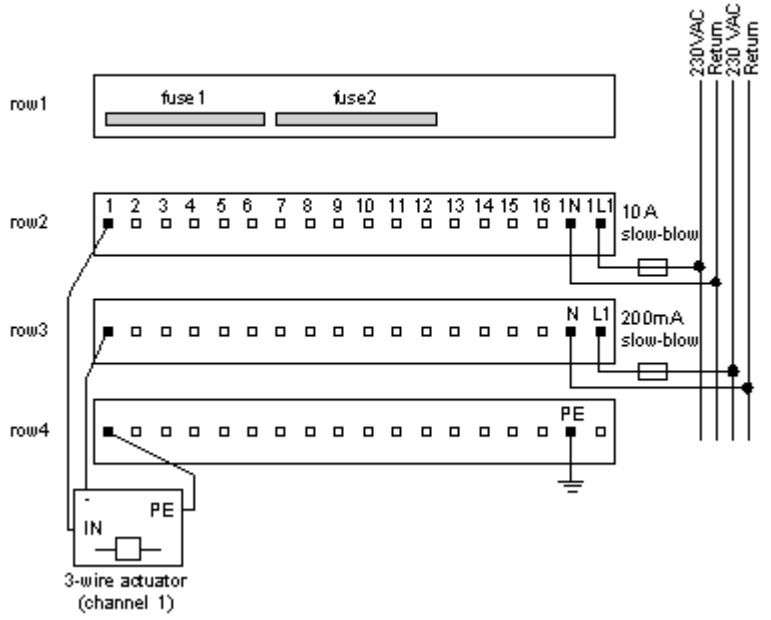

Internal Pin Connections
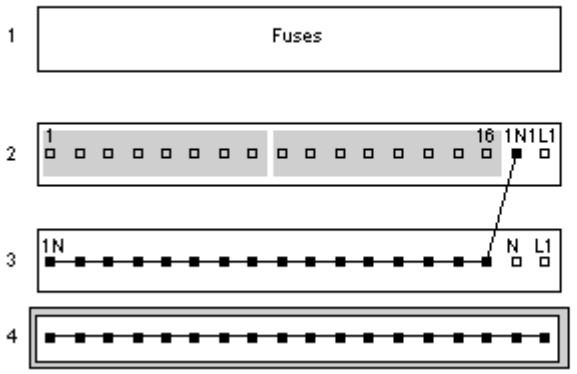
Rows 1 through 3 show the internal connections between terminals on the I/O base. Row 4 shows the internal connections on the optional busbar.