Product data sheet

Specifications

Transformer, dry type, 150kVA, 3 phase, 480V delta primary, 208Y/120V secondary, 22D, 150C rise

EE150T3H

Discontinued

Main

Product	Energy Efficient Transformer
Enclosure Code	22D
Enclosure Type	NEMA 2
Insulation Temperature	428 °F (220 °C)
Phase	3 phases
Primary Voltage	480 V delta
Power Rating	150 kVA
Secondary Voltage	208Y/120 V
Full Capacity Taps	6 2.5 % 2+ 4-
Temperature Rise	150 °C
Winding Material	Aluminium

Complementary

Height	43.75 in (1111.25 mm)
Width	32 in (812.80 mm)
Depth	27 in (685.80 mm)
Net Weight	800.00 lb(US) (362.874 kg)

Packing Units

Unit Type Of Package 1	PCE
Number Of Units In Package 1	1
Package 1 Height	48.00 in (121.92 cm)
Package 1 Width	28.70 in (72.898 cm)
Package 1 Length	33.00 in (83.82 cm)
Package 1 Weight	942.01 lb(US) (427.288 kg)

Contractual warranty

Warranty	18 months

Disclaimer: This documentation is not intended as a substitute for and is not to be used for determining suitability or reliability of these products for specific user applications

Sustainability

Green Premium™ label is Schneider Electric's commitment to delivering products with best-in-class environmental performance. Green Premium promises compliance with the latest regulations, transparency on environmental impacts, as well as circular and low-CO_2 products.

Guide to assessing product sustainability is a white paper that clarifies global eco-label standards and how to interpret environmental declarations.

Learn more about Green Premium >

Guide to assess a product's sustainability >

Transparency RoHS/REACh

Well-being performance

Reach Free Of Svhc	
Toxic Heavy Metal Free	
Mercury Free	
Rohs Exemption Information	Yes

Certifications & Standards

Reach Regulation	REACh Declaration
Eu Rohs Directive	Compliant EU RoHS Declaration
China Rohs Regulation	China RoHS declaration Pro-active China RoHS declaration (out of China RoHS legal scope)
Environmental Disclosure	Product Environmental Profile
Circularity Profile	No need of specific recycling operations

Dimensions Drawings
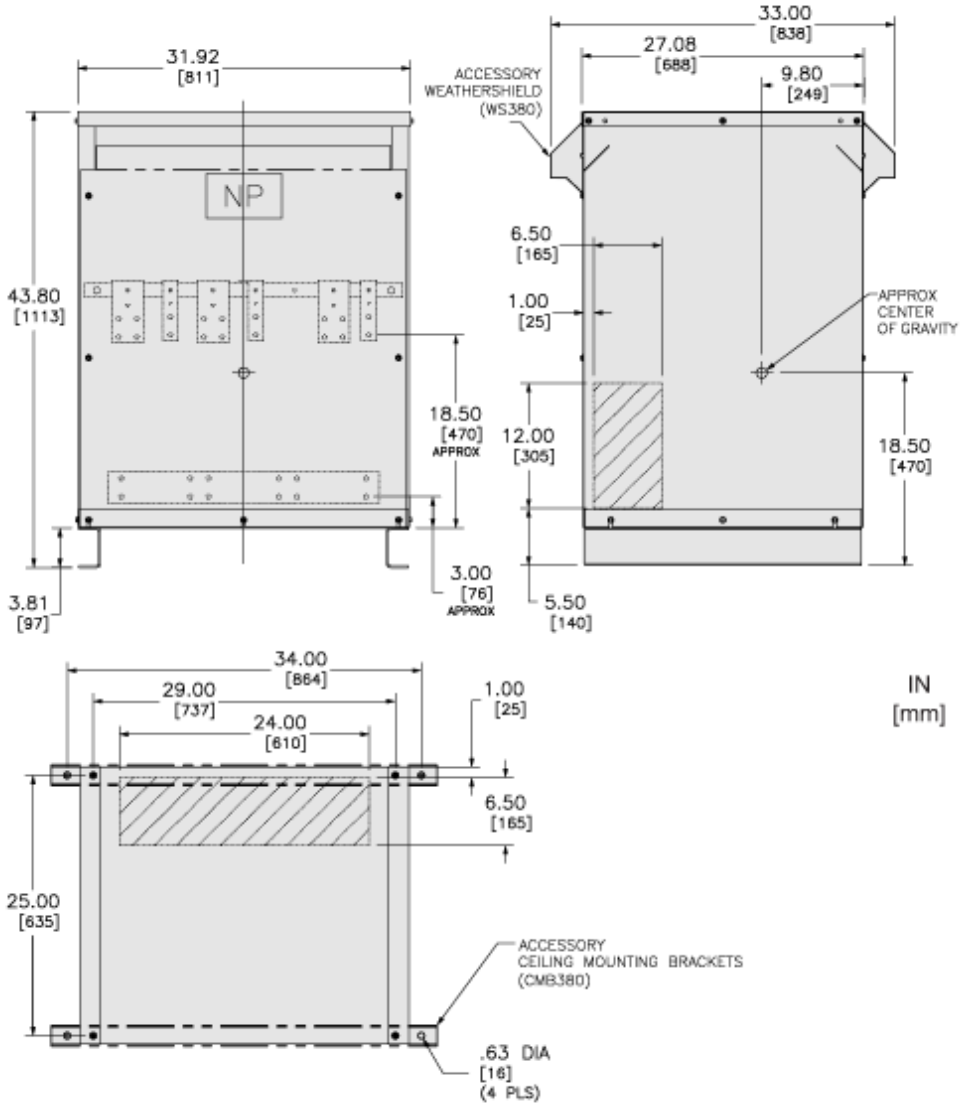
Approximate Dimensions