# Product data sheet

Specifications

## Transformer, dry type, 15kVA, 3 phase, 480V delta primary, 208Y/120V secondary, 17D, 115C rise

EE15T3HF

Discontinued on: Oct 11, 2022

Discontinued

## Main

| | |
|---|---|
| **Product** | Energy Efficient Transformer |
| **Enclosure Code** | 17D |
| **Enclosure Type** | NEMA 2 |
| **Insulation Temperature** | 428 °F (220 °C) |
| **Phase** | 3 phases |
| **Primary Voltage** | 480 V delta |
| **Power Rating** | 15 kVA |
| **Secondary Voltage** | 208Y/120 V |
| **Full Capacity Taps** | 6 2.5 % 2+ 4- |
| **Temperature Rise** | 115 °C |
| **Winding Material** | Aluminium |

## Packing Units

| | |
|---|---|
| **Unit Type Of Package 1** | PCE |
| **Number Of Units In Package 1** | 1 |
| **Package 1 Height** | 33.00 in (83.82 cm) |
| **Package 1 Width** | 21.70 in (55.118 cm) |
| **Package 1 Length** | 17.70 in (44.958 cm) |
| **Package 1 Weight** | 222.00 lb(US) (100.698 kg) |

## Contractual warranty

| | |
|---|---|
| **Warranty** | 18 months |

Disclaimer: This documentation is not intended as a substitute for and is not to be used for determining suitability or reliability of these products for specific user applications

## Sustainability

**Green Premium™ label** is Schneider Electric's commitment to delivering products with best-in-class environmental performance. Green Premium promises compliance with the latest regulations, transparency on environmental impacts, as well as circular and low-$CO_2$ products.

**Guide to assessing product sustainability** is a white paper that clarifies global eco-label standards and how to interpret environmental declarations.

Learn more about Green Premium >

Guide to assess a product's sustainability >

Transparency RoHS/REACh

## Well-being performance

| | |
|---|---|
| Reach Free Of Svhc | |
| Toxic Heavy Metal Free | |
| Mercury Free | |
| Rohs Exemption Information | Yes |

## Certifications & Standards

| | |
|---|---|
| **Reach Regulation** | REACh Declaration |
| **Eu Rohs Directive** | Compliant<br>EU RoHS Declaration |
| **China Rohs Regulation** | China RoHS declaration<br>Pro-active China RoHS declaration (out of China RoHS legal scope) |
| **Environmental Disclosure** | Product Environmental Profile |
| **Circularity Profile** | No need of specific recycling operations |

Dimensions Drawings
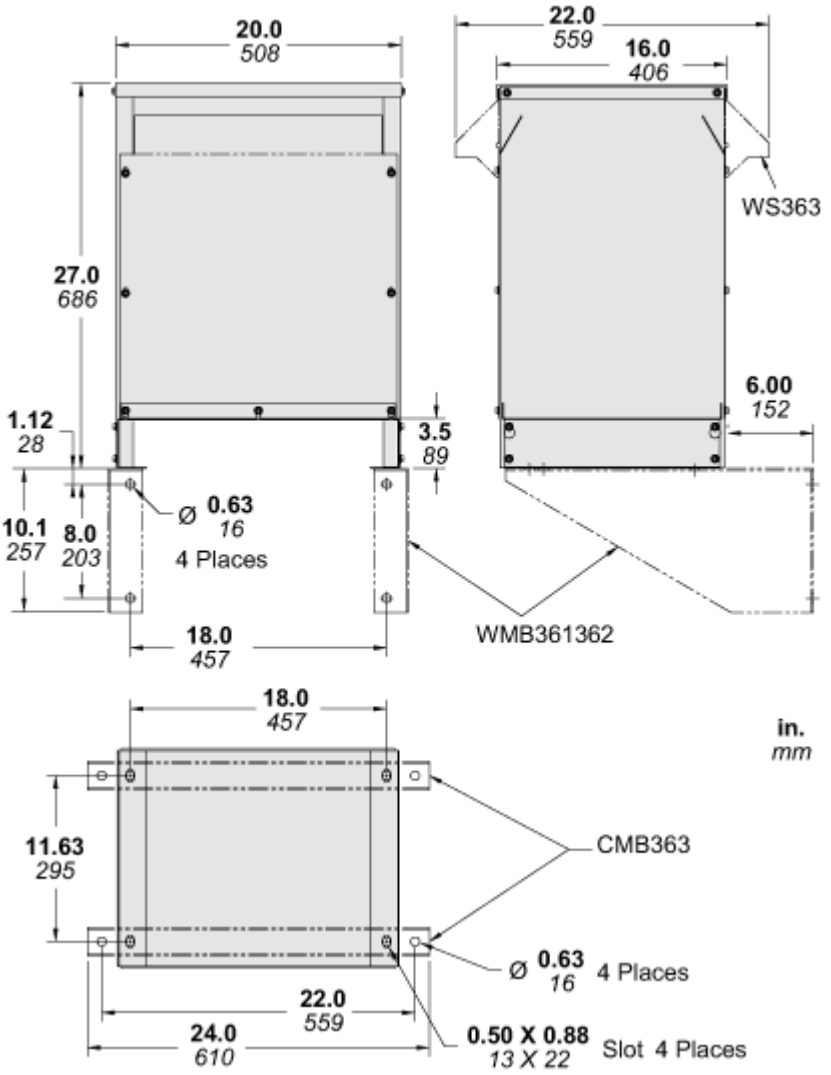
## Approximate Dimensions