Product data sheet

Specifications

Discontinued

Transformer, dry type, 75kVA, 3 phase, 600V delta primary, 208Y/120V secondary, 20D, 150C rise

EE75T65H

Discontinued on: Mar 31, 2023

End-of-service on: Apr 30, 2023

Main

Product	Energy Efficient Transformer
Enclosure Code	20D
Enclosure Type	NEMA 2
Insulation Temperature	428 °F (220 °C)
Phase	3 phases
Primary Voltage	600 V delta
Power Rating	75 kVA
Secondary Voltage	208Y/120 V
Full Capacity Taps	6 2.5 % 2+ 4-
Temperature Rise	150 °C
Winding Material	Aluminium

Packing Units

Unit Type Of Package 1	PCE
Number Of Units In Package 1	1
Package 1 Height	43.39 in (110.2 cm)
Package 1 Width	31.50 in (80.0 cm)
Package 1 Length	21.10 in (53.6 cm)
Package 1 Weight	626.11 lb(US) (283.999 kg)

Contractual warranty

Warranty	18 months

Disclaimer: This documentation is not intended as a substitute for and is not to be used for determining suitability or reliability of these products for specific user applications

Sustainability

Green Premium™ label is Schneider Electric's commitment to delivering products with best-in-class environmental performance. Green Premium promises compliance with the latest regulations, transparency on environmental impacts, as well as circular and low-CO_2 products.

Guide to assessing product sustainability is a white paper that clarifies global eco-label standards and how to interpret environmental declarations.

Learn more about Green Premium >

Guide to assess a product's sustainability >

Transparency RoHS/REACh

Well-being performance

Reach Free Of Svhc	
Toxic Heavy Metal Free	
Mercury Free	
Rohs Exemption Information	Yes

Certifications & Standards

Reach Regulation	REACh Declaration
Eu Rohs Directive	Compliant EU RoHS Declaration
China Rohs Regulation	China RoHS declaration Pro-active China RoHS declaration (out of China RoHS legal scope)
Environmental Disclosure	Product Environmental Profile
Circularity Profile	No need of specific recycling operations

Dimensions Drawings
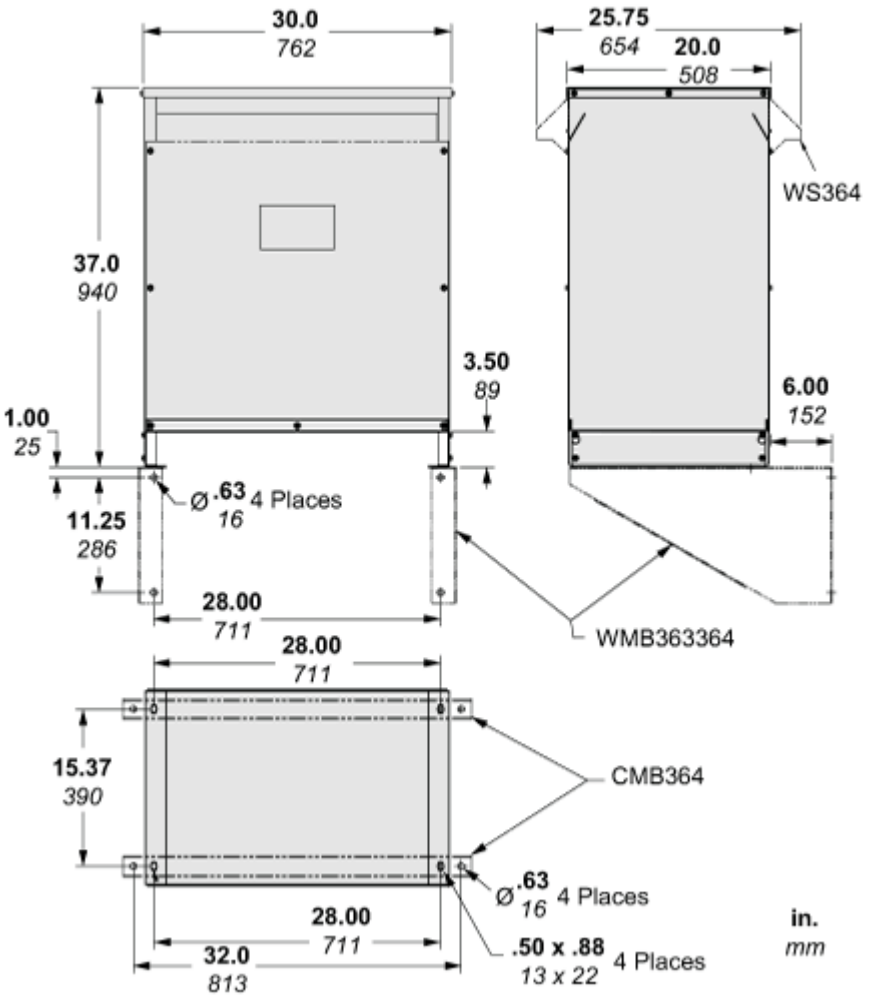
Approximate Dimensions