Product data sheet

Specifications

touch panel screen, Harmony STO & STU, 4.3inch wide, RS 232 terminal block

HMISTO705

Main

Range Of Product	Harmony STO & STU
Product Or Component Type	Touch panel screen
Software Designation	EcoStruxure Operator Terminal Expert
Operating System	Harmony

Complementary

Display Size	4.3 inch
Display Type	Colour TFT LCD
Display Colour	65536 colours
Display Resolution	480 x 272 pixels
Touch Panel	Analogue
Backlight Lifespan	50000 hours white
Brightness	16 levels via touch panel
Character Font	ASCII (European characters) Chinese (simplified Chinese) Korean Japanese (ANK, Kanji) Cyrillic Taiwanese (traditional Chinese)
[Us] Rated Supply Voltage	12...24 V DC - 10...20 %
Power Consumption In W	7.5 W
Number Of Pages	8999
Memory Description	Back up of data 512 KB Application memory 26 MB
Integrated Connection Type	1 USB 2.0 type mini B 1 USB 2.0 type A 1 serial link - 9-pin terminal block - RS232C 2400...115200 bps)
Supply	External source
Realtime Clock	With RTC-battery set optional
Downloadable Protocols	Third party protocols Modbus
Range Compatibility	MitsubishI Siemens Omron Allen-Bradley
Fixing Mode	By 2 installation fasteners 1.5 to 6 mm thick panel
Enclosure Material	PPT

Disclaimer: This documentation is not intended as a substitute for and is not to be used for determining suitability or reliability of these products for specific user applications

Front Material	Plastic
Cut-Out Dimensions	77.5 x 112.5 mm 66 x 105 mm with mounting adaptor
Net Weight	0.49 lb(US) (0.22 kg)

Environment

Standards	ANSI/ISA 12.12.01 CSA C22.2 No 142 EN 61000-6-2 CSA C22.2 No 213 UL 61010-1 EN 61131-2 EN 61000-6-4 UL 61010-2-201
Product Certifications	KCC CE UL C-Tick ATEX zone 2/22 cUL UKCA
Ambient Air Temperature For Operation	32…122 °F (0…50 °C)
Ambient Air Temperature For Storage	-4…140 °F (-20…60 °C)
Relative Humidity	10…90 % without condensation
Operating Altitude	2000 m
Ip Degree Of Protection	IP65f front panel) IP20 rear panel)
Nema Degree Of Protection	NEMA 4X/13 front panel indoor use)
Shock Resistance	15 gn 11 msIEC 61131-2
Vibration Resistance	1 gn 5…150 Hz) IEC 61131-2 3.5 mm constant amplitude 5…150 Hz) IEC 61131-2
Electromagnetic Compatibility	Resistance to radiated electromagnetic fields - test level: 10 V/m (80 MHz...2.7 GHz) Resistance to electrostatic discharge - test level: 8 kV level 3 (air discharge) conforming to EN 61000-4-2 Resistance to electrostatic discharge - test level: 6 kV level 3 (direct contact) conforming to EN 61000-4-2

Packing Units

Unit Type Of Package 1	PCE
Number Of Units In Package 1	1
Package 1 Height	5.20 in (13.2 cm)
Package 1 Width	3.07 in (7.8 cm)
Package 1 Length	7.17 in (18.2 cm)
Package 1 Weight	19.35 oz (548.5 g)

Sustainability

Green Premium™ label is Schneider Electric's commitment to delivering products with best-in-class environmental performance. Green Premium promises compliance with the latest regulations, transparency on environmental impacts, as well as circular and low-CO_2 products.

Guide to assessing product sustainability is a white paper that clarifies global eco-label standards and how to interpret environmental declarations.

Learn more about Green Premium >

Guide to assess a product's sustainability >

Transparency RoHS/REACh

Well-being performance

Mercury Free

Rohs Exemption Information	Yes

Certifications & Standards

Reach Regulation	REACh Declaration
Eu Rohs Directive	Pro-active compliance (Product out of EU RoHS legal scope)
China Rohs Regulation	China RoHS declaration
Environmental Disclosure	Product Environmental Profile
Weee	The product must be disposed on European Union markets following specific waste collection and never end up in rubbish bins
Circularity Profile	End of Life Information

Dimensions Drawings

External Dimensions

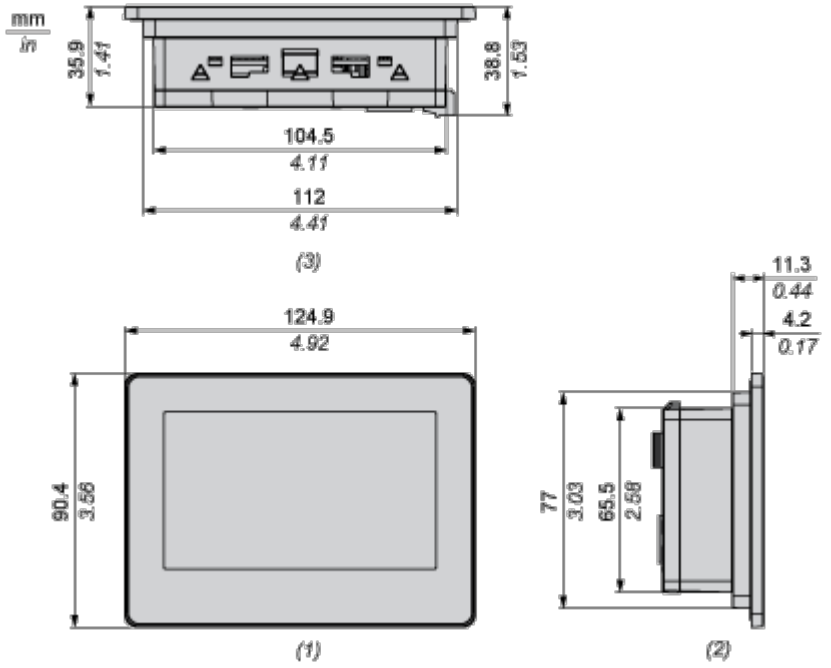

1 Front

2 Left

3 Bottom

Dimensions with Installation Fasteners

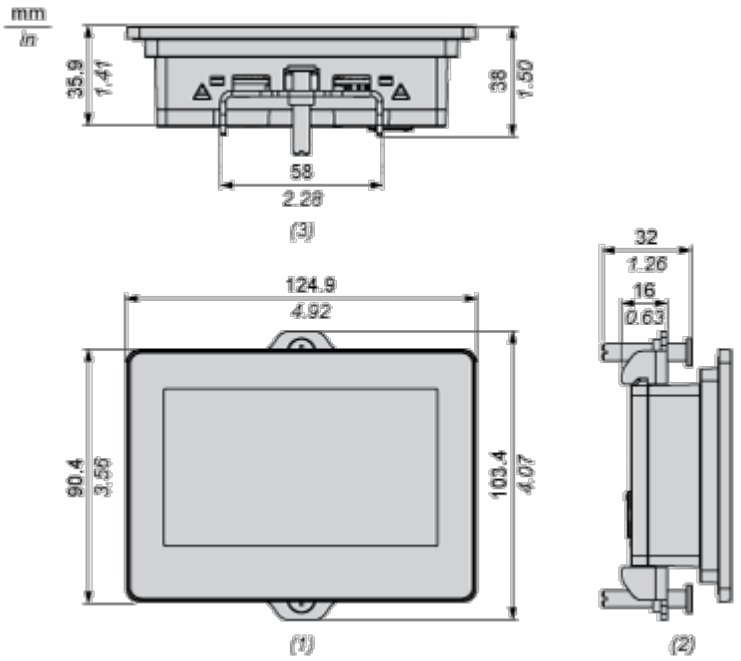

1 Front

2 Left

3 Bottom

Mounting and Clearance

Mounting

Panel Cut-out Dimensions

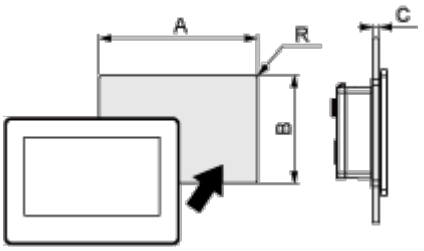

Dimensions in mm

Description	A	B	C	R
Without adapter	112.5	77.5	1.5...6	3 max.
With adapter	105	66	1.5...6	3 max.

Dimensions in in.

Description	A	B	C	R
Without adapter	4.43	3.05	0.06...0.24	0.12 max.
With adapter	4.13	2.6	0.06...0.24	0.12 max.

Installation Requirements

Mounting Angle

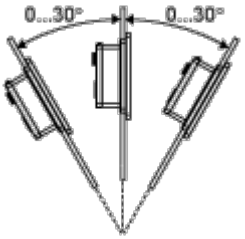

When installing this product in a slanted position with an incline more than 30°, the ambient temperature must not exceed 40 °C (104 °F). You may need to use forced air cooling (fan, A/C) to ensure the ambient operating temperature is 40 °C or less (104 °F or less).
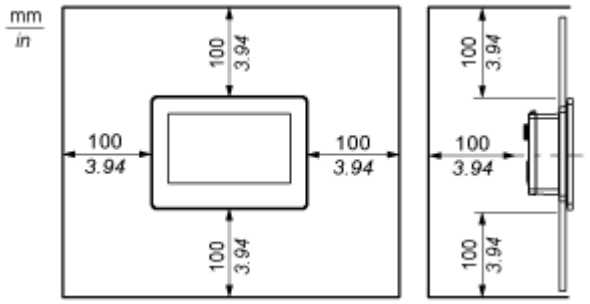
Clearance